A4

HOME

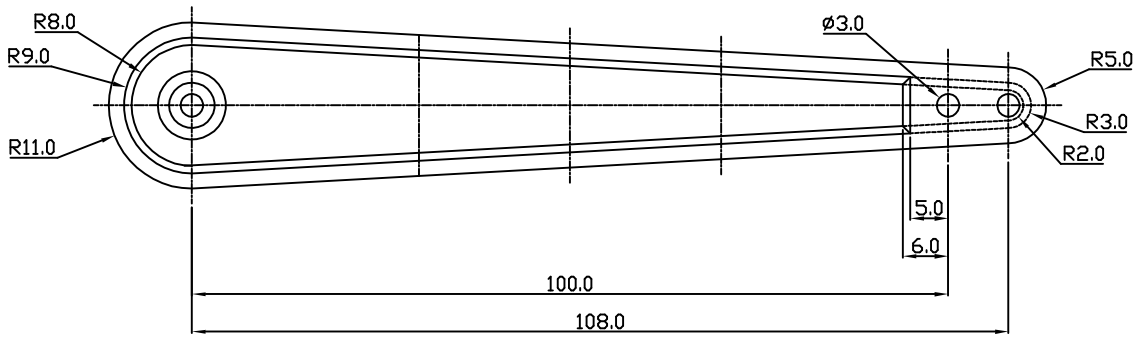

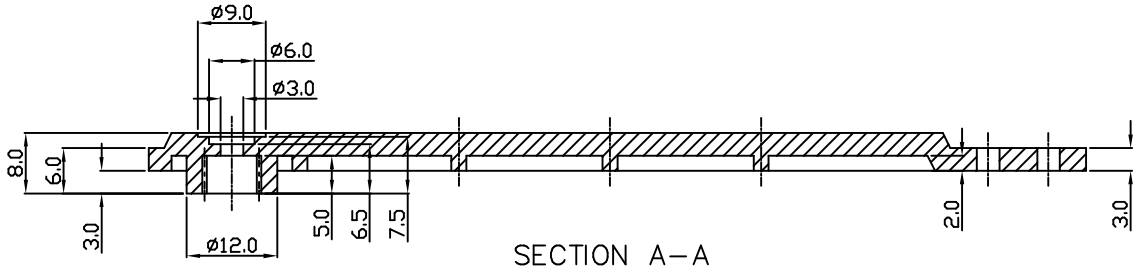

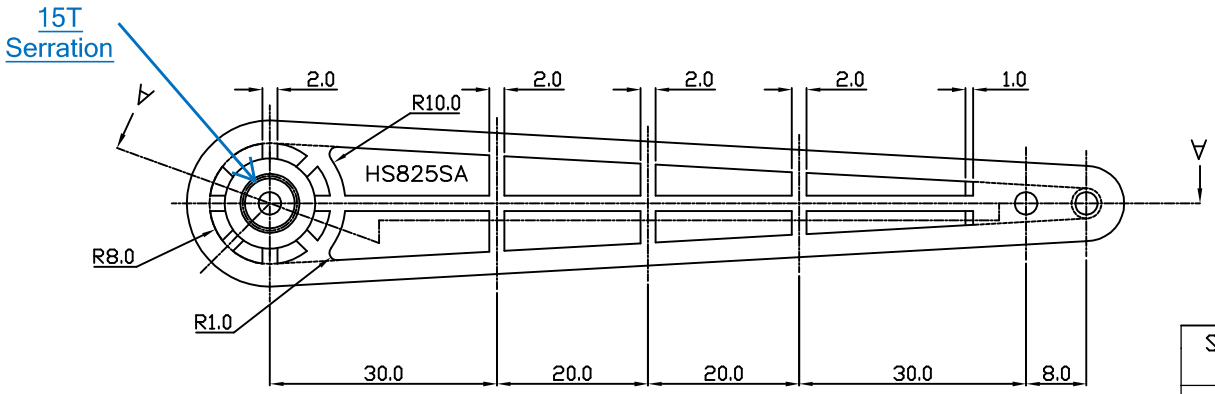

SCALE 1/1	PART NAME	825SA-15
UNIT : mm	MATERIAL	ENGINEERING PLASTIC
Tolerance 0.5~8.99 ±0.05 9.0~119.9 ±0.1 120~315 ±0.2	TYPE	SAIL ARM HORN

HITEC

Revision D : 23.04.28

PROPERTY HITECRCD,KOREA LIMITED THIS DRAWING MUST NOT BE REPRODUCED OR DISCLOSED TO THIRD PARTIES WITHOUT THE PRIOR CONSENT OF HITECRCD,KOREA LIMITED ALL RIGHT RESERVED.