D71MH General Specification.

Control System	PWM/TTL(Half Duplex)			-
Position Sensor Type	Contact Analog Potentiometer			-
Motor Type	Cored Metal Brush			At the Max voltage, it is recommended to be used only for a short time duration.
Operating Voltage Range	3.5 ~ 8.4V			
Voltage	-	6.0V	7.4V	
No Load Speed	-	0.16sec/60˚	0.13sec/60˚	At 25°C(±10%), 45%RH(±10%) measurement environment
Stall Torque	-	3.9kgf·cm (54.16oz·in)	4.5kgf·cm (62.49oz·in)	
Peak Efficiency Torque	-	0.8kgf·cm (11.11oz·in)	0.9kgf·cm (12.5 oz·in)	
Standing Current	-	30mA	30mA	
No Load Running Current	-	200mA	220mA	
Stall Current	-	1,300mA	1,500mA	
Deadband	-	2μs	2μs	
Operating Travel	Default: ±60º, Programmable: Max 175º / Pulse Width: 900~2100μs(Center:1500μs)			-
Continuous Rotation	n/a			-
Operating Temperature Range	-20˚C ~ +60˚C (-4˚F ~+140˚F)			-
Storage Temperature Range	-30˚C ~ +80˚C (-22˚F ~+176˚F)			-
Connector Wire Length	160mm (6.299inch)			
Connector Wire Gauge	28AWG			
Dimensions	23.6mm x 11.6mm x 31.0mm (0.929inch x 0.457inch x 1.220inch)			General Tolerance ±0.1mm
Weight	12.5g (0.441oz)			Excluding the weight of Horn
Bearing Type	1 Ball Bearing			-
Case Material	Engineering Plastic			-
Gear Material	1 Resin & 4 Metal Gears			-
Gear Train Backlash	Max 0.5˚			-
Horn Gear Spline	M25T(Ø5)			-
IP-Rating	IP4X			-
Servo Amplifier Type	32bit Programmable Digital			-

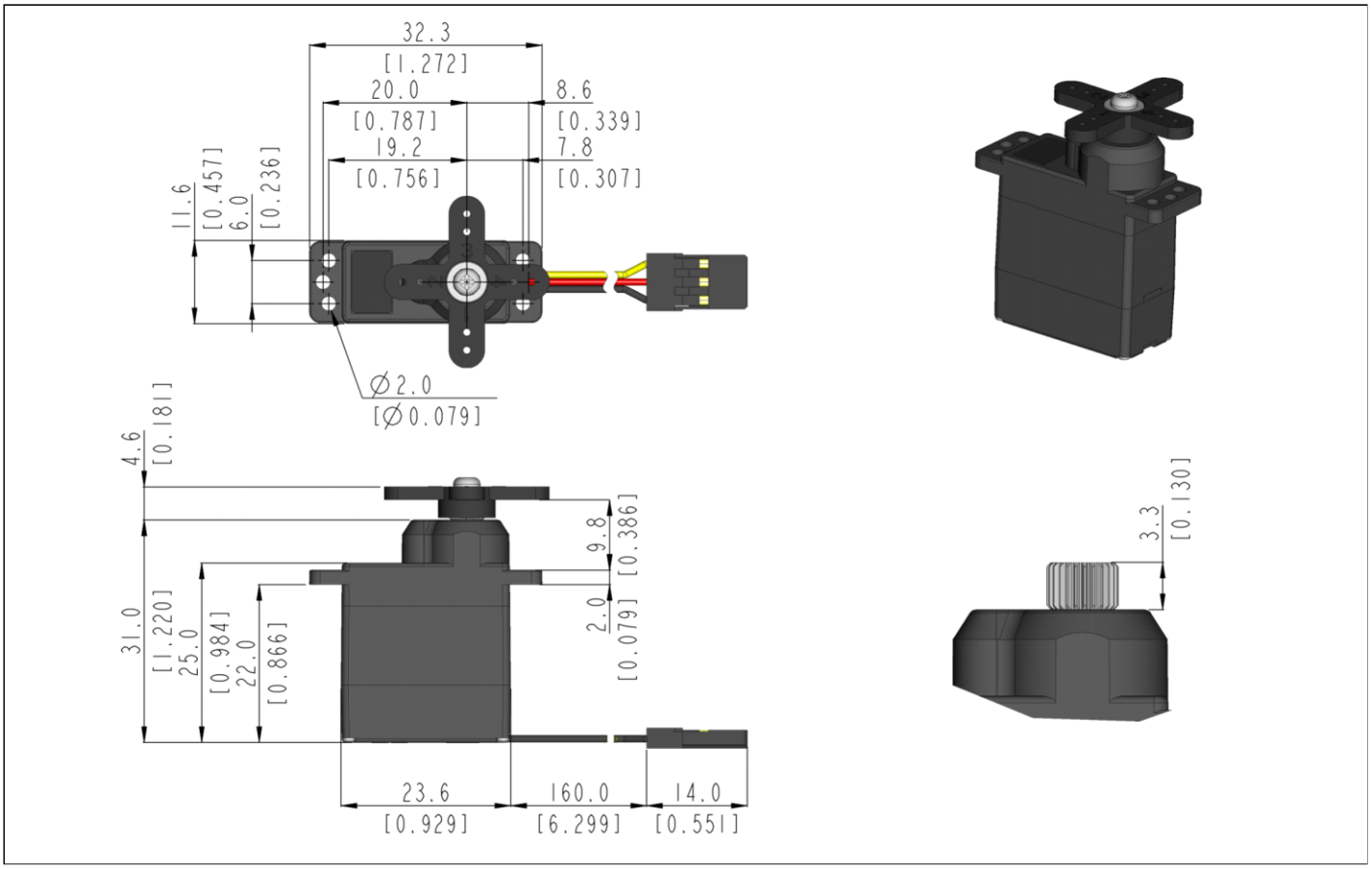

1:1 scale (Unit : mm[inch])

- **This product should not be used directly on the human body for medical purposes.**
- **This product should not be used for war weapons.**
- **All specifications are subject to change without notice.**